SSCX SERIES CENTRIFUGAL PUMPS

STAINLESS-STEEL CONSTRUCTION

BERKELEY®

www.atb.com.mx / Email ventas@atb.com.mx , Tel 81-82141600

REMARKABLE RELIABILITY

High-head performance and quiet operation join corrosion-resistant dependability with Berkeley SSCX Series centrifugal pumps. In addition, the SSCX Series features:

Stainless-Steel Housing and Shaft – Maximum corrosion resistance in chemical as well as water applications; smooth flow path assures quiet operation.

High-Temperature Rating – The SSCX Series centrifugal pump (with 304 SS Impeller) is designed for temperatures to 250°F, making it an ideal choice for a wide range of pump applications and varying temperature conditions. The Noryl® impeller is rated to a maximum operating temperature of 185°F.

Mechanical Shaft Seals – Choice of seal options to meet your application needs. All are precision lapped and highly polished for long life and reliability.

Impeller Options – 304 Stainless Steel or precision-molded Noryl® feature ultra-smooth flow ports to maximize performance and efficiency.

Drain/Vent Ports – Priming and draining is easier, faster.

Typical Applications

- Water Circulation
- Booster Service
- Liquid Transfer
- Spray Systems
- Jockey Pumps
- OEM Applications

304 S.S. / 304 S.S. IMPELLER

SSCXS SERIES (SS IMPELLER)

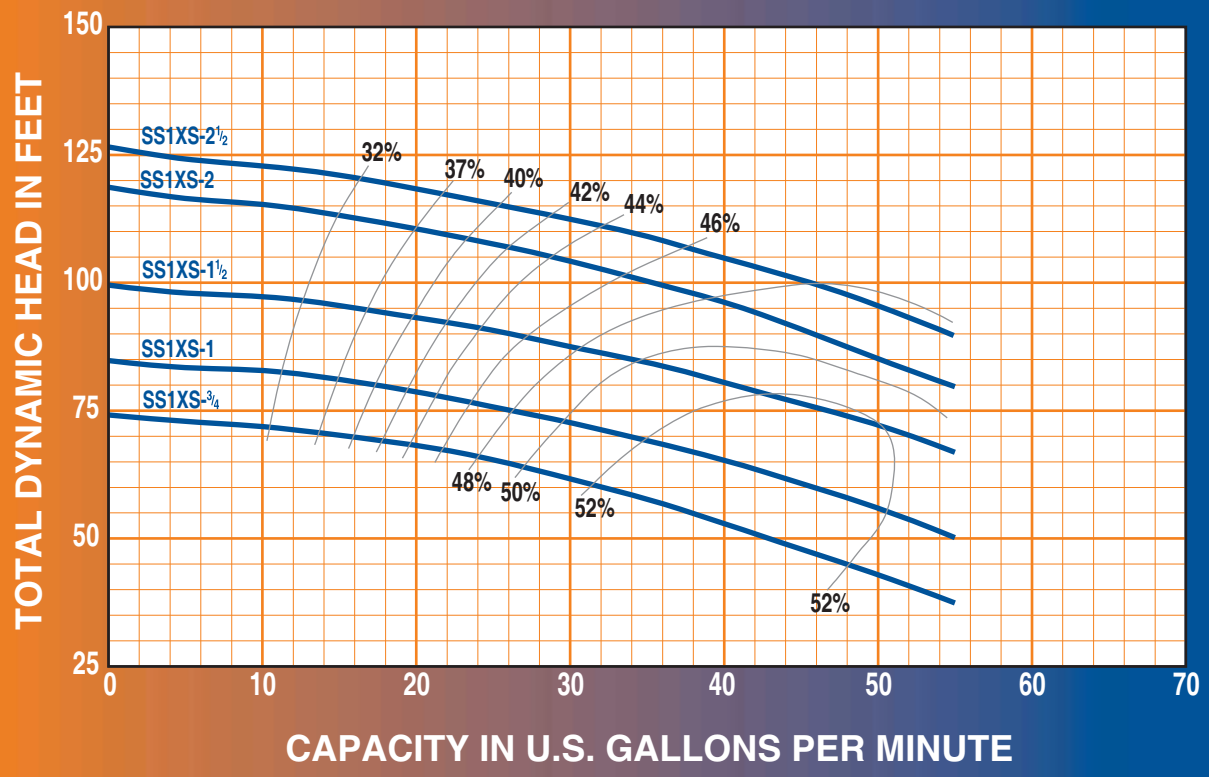

304 S.S. / NORYL® IMPELLER

SSCXN SERIES (NORYL IMPELLER)

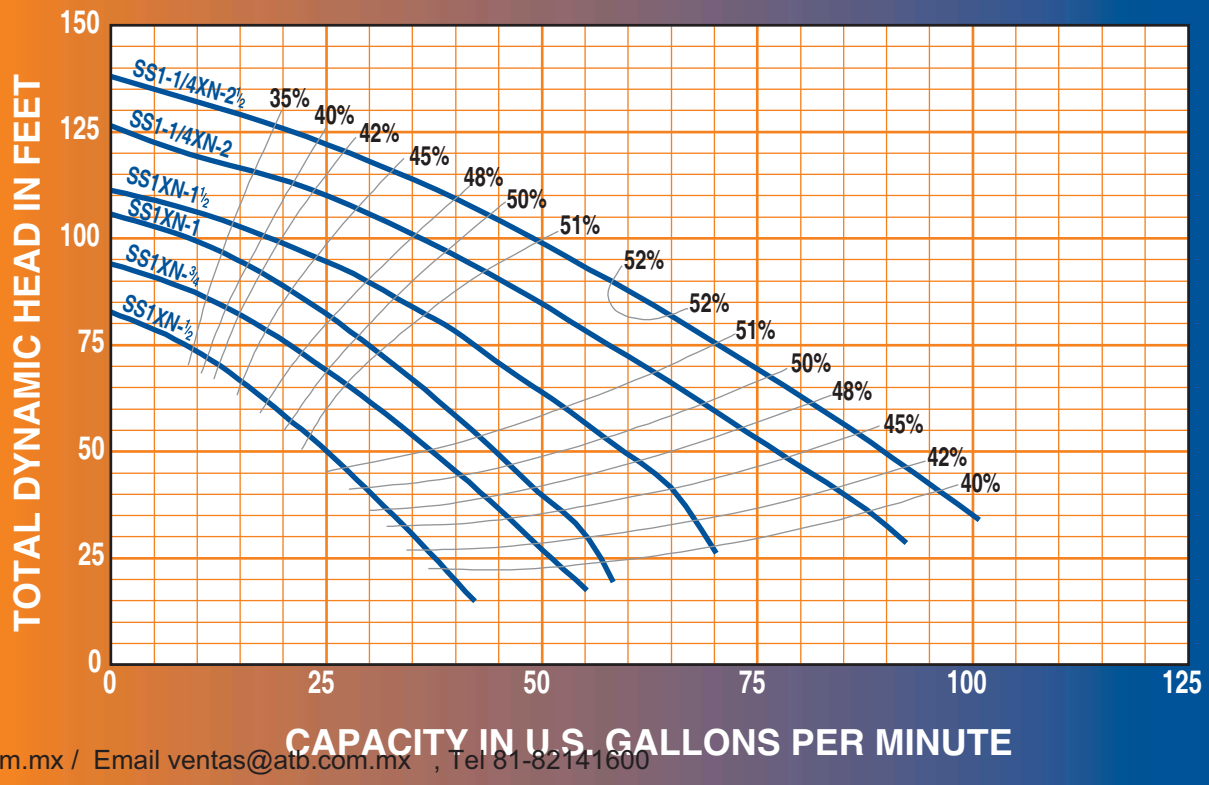

NCE & VERSATILITY

SS Impeller

Model Number	HP	Voltage/ Phase	Enclosure	Mech. Seal (std.)	Suction Size	Discharge Size	Impeller Diameter	Motor Amps. (max.)	Lbs/Kg
SS1XS-3/4	3/4	115/230-1	ODP	2*	1-1/4"	1"	4-1/4"	14.8/7.4	25/12
		208-230/460-3						3.6/1.8	23/11
		115/230-1	TEFC	4*				14.2/7.1	37/17
		208-230/460-3						3.6/6.8	32/15
SS1XS-1	1	115/230-1	ODP	2*	1-1/4"	1"	4-9/16"	19.2/9.6	27/13
		208-230/460-3						4.7/2.35	28/14
		115/230-1	TEFC	4*				18.0/9.0	40/18
		208-230/460-3						4.8/2.4	35/16
SS1XS-1-1/2	1-1/2	115/230-1	ODP	2*	1-1/4"	1"	5"	24.0/12.0	32/15
		208-230/460-3						6.8/3.4	28/14
		115/230-1	TEFC	4*				11.7	50/23
		208-230/460-3						6.0/3.0	37/17
SS1XS-2	2	115/230-1	ODP	2*	1-1/4"	1"	5-1/2"	26.0/13.0	36/16
		208-230/460-3						8.5/4.25	31/14
		230-1	TEFC	4*				11.7	52/24
		230/460-3						7.0/3.5	46/21
SS1XS-2-1/2	2-1/2	230-1	ODP	2*	1-1/4"	1"	5-3/4"	26.0/13.0	37/17
		208-230/460-3						8.5/4.25	33/15
		230-1	TEFC	4*				11.7	55/25
		230/460-3						7.0/3.5	46/21

Noryl Impeller

Model Number	HP	Voltage/ Phase	Enclosure	Mech. Seal (std.)	Suction Size	Discharge Size	Impeller Diameter	Motor Amps. (max.)	Lbs/Kg
SS1XN-1/2	1/2	115/230-1	ODP	1*	1-1/4"	1"	4-3/4"	8.8/4.4	22/10
		208-230/460-3						2.3/1.15	26/12
		115/230-1	TEFC	1*				8.2/4.1	32/15
		208-230/460-3						2.2/1.1	29/13
SS1XN-3/4	3/4	115/230-1	ODP	1*	1-1/4"	1"	5"	12.4/6.2	25/12
		208-230/460-3						3.1/1.55	27/13
		115/230-1	TEFC	1*				11.6/5.8	37/17
		208-230/460-3						2.9/1.45	32/15
SS1XN-1	1	115/230-1	ODP	1*	1-1/4"	1"	5-1/4"	14.8/7.4	27/13
		208-230/460-3						3.6/1.8	28/13
		115/230-1	TEFC	1*				14.2/7.1	40/18
		208-230/460-3						3.6/1.8	35/16
SS1XN-1-1/2	1-1/2	115/230-1	ODP	1*	1-1/4"	1"	5-5/16"	19.2/9.6	32/15
		208-230/460-3						4.7/2.35	28/13
		115/230-1	TEFC	1*				18.0/9.0	50/23
		208-230/460-3						4.8/2.4	37/17
SS1-1/4XN-2	2	115/230-1	ODP	1*	1-1/2"	1-1/4"	5-7/8"	24.0/12.0	36/16
		208-230/460-3						6.8/3.4	31/14
		230-1	TEFC	1*				10.4	52/24
		230/460-3						6.0/3.0	46/21
SS1-1/4XN-2-1/2	2-1/2	230-1	ODP	1*	1-1/2"	1-1/4"	6-1/8"	24.0/12.0	37/17
		230/460-3						8.5/4.25	33/15
		230-1	TEFC	1*				11.7	55/25
		230/460-3						7.3/3.65	46/21

DURABLE LONG-LIFE CONSTRUCTION

304 S.S. / 304 S.S. IMPELLER

Materials of Construction

Item No.	Description	Material
1	Motor	
2	Water Slinger	Neoprene
3	Seal Plate	AISI 304 S.S.
5	Impeller	AISI 304 S.S.
6	Impeller Locking Screw	18-8 S.S. (3 Phase Only)
7	Casing	AISI 304 S.S.
8	Base	Powder Painted Steel
9	Isolator	Natural Rubber
10	Socket Head Capscrew	AISI 304 S.S.
11	Socket Head Capscrew	18-8 S.S.
12	Vent/Drain Plug (Top & Bottom)	AISI 304 S.S.
13	Gasket (Top & Bottom)	Teflon®
14	O-Ring	Viton
4	Mechanical Seal	

Seal Option	Crane Type	Rotary	Stationary	Elastomer	Metal Parts
2	2100	Carbon	Ceramic	Viton	18-8 S.S.
3	2100	Carbon	Silicon-Carbide	Viton	18-8 S.S.
4	2100	Silicon-Carbide	Silicon-Carbide	Viton	18-8 S.S.

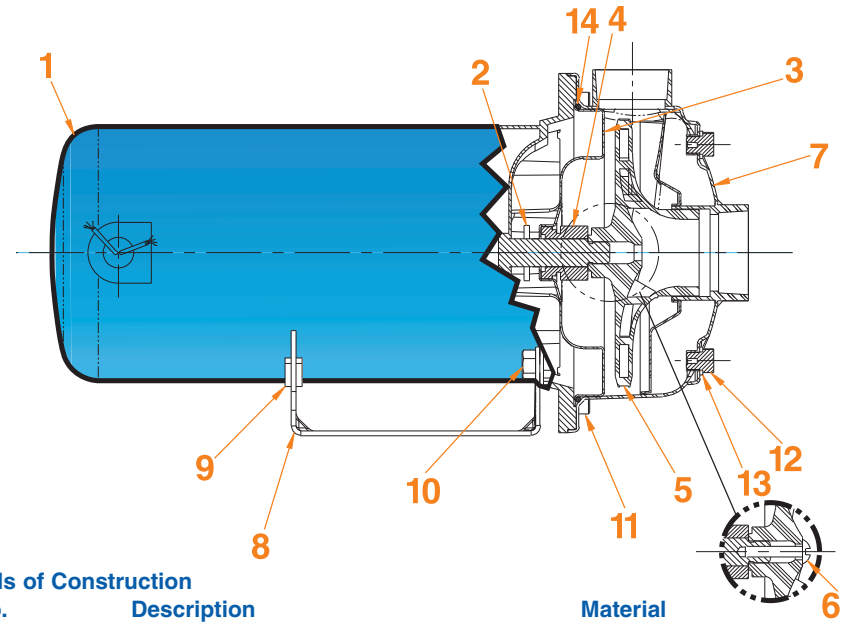

304 S.S. / NORYL® IMPELLER

Materials of Construction

Item No.	Description	Material
1	Motor	
2	Water Slinger	Neoprene
3	Seal Plate	AISI 304 S.S.
5	Impeller	Noryl®/AISI 316 S.S.
6	Impeller Locking Screw	18-8 S.S. (3 Phase Only)
7	Casing	AISI 304 S.S.
8	Base	Powder Painted Steel
9	Isolator	Natural Rubber
10	Socket Head Capscrew	AISI 304 S.S.
11	Socket Head Capscrew	18-8 S.S.
12	Vent/Drain Plug (Top & Bottom)	AISI 304 S.S.
13	Gasket (Top & Bottom)	Teflon®
14	O-Ring	Buna-N
4	Mechanical Seal	

Seal Option	Crane Type	Rotary	Stationary	Elastomer	Metal Parts
1	6	Carbon	Ceramic	Buna-N	18-8 S.S.
2	2100	Carbon	Ceramic	Viton	18-8 S.S.
3	2100	Carbon	Silicon-Carbide	Viton	18-8 S.S.
4	2100	Silicon-Carbide	Silicon-Carbide	Viton	18-8 S.S.

SSCX SERIES CENTRIFUGAL PUMPS

CHEMICAL COMPATIBILTY

Chemical Name	Concentration	Temperature Degree F	Noryl®	304 SS	Buna	Viton
Acetic Acid	10%	78	A	A	B	A
	10%	185	A	A	B	B
	90%	78	A	A	D	B
	90%	185	A	A	D	D
Ammonia		78	A	A	D	A
Ammonium Hydroxide	10%	78	A	A	A	A
	10%	185	A	A	A	A
Ammonium Phosphate	Sat.	78	A	A	A	A
	Sat.	185	A	A	A	A
Antifreeze		78	A	A	A	A
		185	A	A	A	A
Cascade	10%	78	A	A	A	A
	10%	185	A	A	A	A
Chlorox		78	A	A	B	A
		185	A	A	B	A
Corn Oil		78	A	A	A	A
		185	A	A	A	A
Ethylene Glycol		78	A	A	A	A
Isopropyl Alcohol		78	A	A	D	A
		185	B	A	D	A
Kerosene		78	A	A	D	A
		185	A	A	D	A
Lestoil	2%	78	A	A	—	—
Linseed Oil		78	A	A	A	A
Methyl Alcohol		78	A	A	B	D
White Mineral Oil		78	B	A	A	A
		185	B	A	A	A
Nitric Acid		78	A	A	D	A
		185	A	A	D	A
Oleic Acid		78	A	A	D	B
Phosphoric Acid	60%	78	A	A	D	A
Potassium Bicarbonate	Sat.	78	A	A	A	A
	Sat.	185	A	A	A	A
Potassium Bicarbonate	Sat.	78	A	A	A	A
	Sat.	185	A	A	A	A
Potassium Hydroxide	50%	78	A	A	B	B
	50%	185	A	A	B	B
Silicon		78	A	A	A	A
		185	A	A	A	A
Sodium Bicarbonate	Sat.	78	A	A	A	A
	Sat.	185	A	—	A	A
Sodium Chloride	Sat.	78	A	A	A	A
	Sat.1	85	A	B	A	A
Sodium Hydroxide	10%	78	A	A	B	A
	50%	78	A	B	D	A
	98%	78	A	A	D	A
Transmission Fluid		78	A	A	A	A
		185	A	A	A	A
Water		78	A	A	A	A
		185	A	A	B	A
		212	B	A	B	B

A-No Effect - Excellent B-Minor Effect - Good C-Moderate to Severe Effect D-Not Recommended

The Berkeley difference – Everything we do shows up in the way Berkeley pump users look at us: with confidence. It's a confidence that goes from ordering to delivery to installation, on through years of trouble-free performance. It's a confidence that allows our customers to cure common pump worries and troubles with one simple phrase: Relax, it's a Berkeley™.

BEC2: a Berkeley advantage – Berkeley's Electronic Catalog puts powerful pump specification, application and installation software right at our customer's fingertips 24 hours a day, every day. For more information about BEC2, the SSCX or any other Berkeley product, contact your Berkeley distributor or a Berkeley service representative at: 1-888-BERKELEY.

BERKELEY BEC2 ELECTRONIC CATALOG

The Chemical Compatiblity Chart is not intended to be a complete list. For more information on additional chemical compatibilities, consult with an authorized Berkeley Customer Service Representative.

Teflon® is a registered trademark of E.I. du Pont de Nemours and Company
NORYL® is a registered trademark of General Electric Company

RELAX, IT'S A BERKELEY™

BERKELEY®

Member of Hydraulic Institute